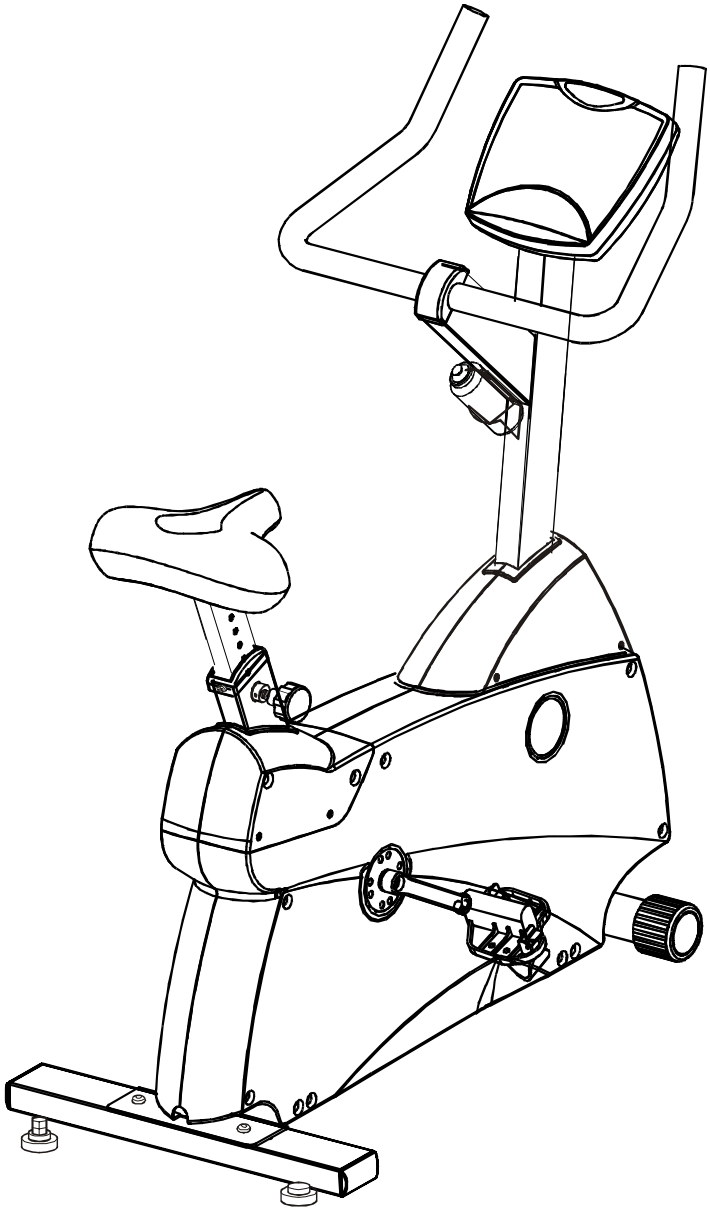

Operation Manual REX2289
Service Manual
Transformer = REX242J

rev. 11/28/05

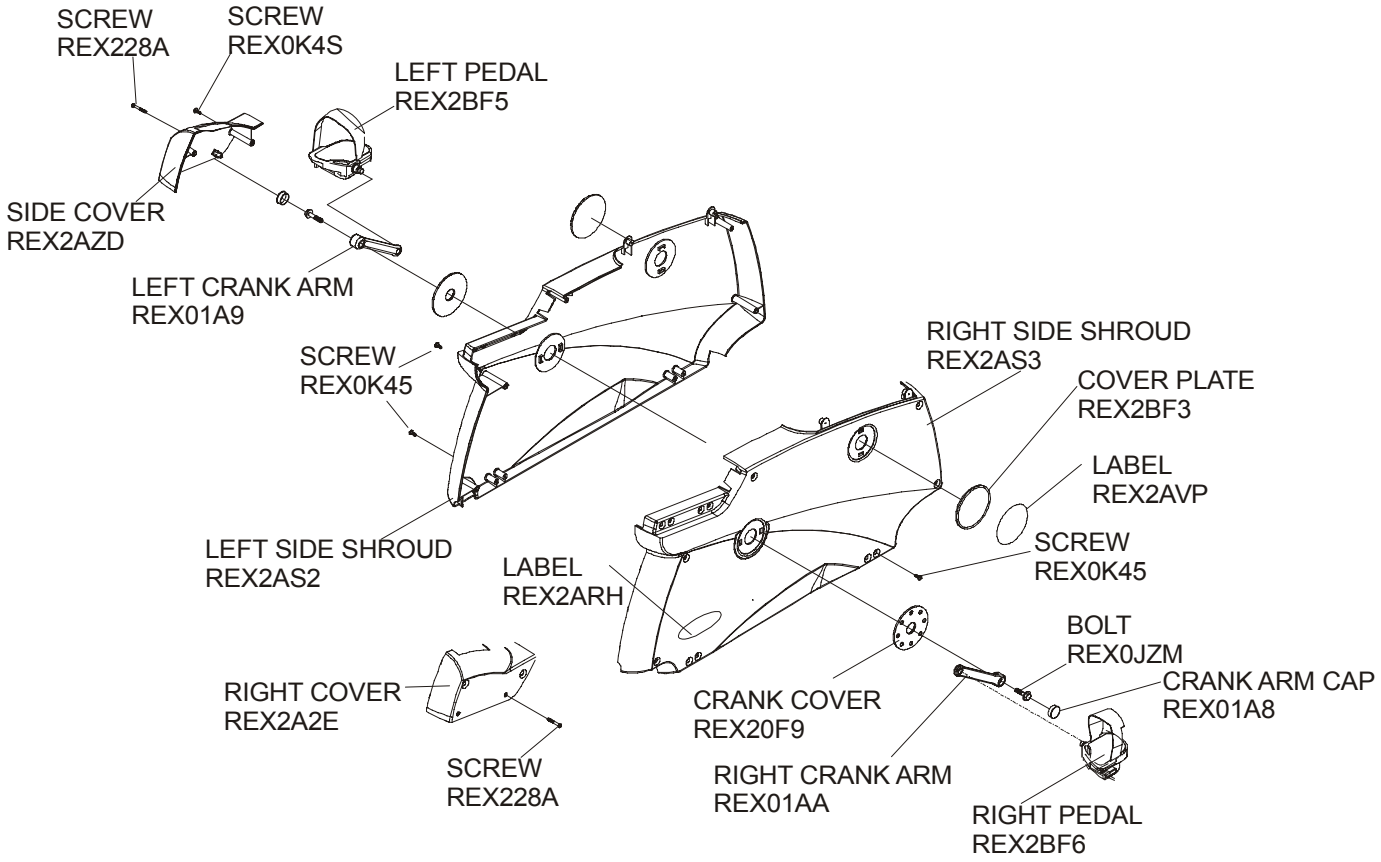
SCREW
REX228A
SCREW
REX0K4S
LEFT PEDAL
REX2BF5
SIDE COVER
REX2AZD
LEFT CRANK ARM
REX01A9
SCREW
REX0K45
LEFT SIDE SHROUD
REX2AS2
RIGHT SIDE SHROUD
REX2AS3
COVER PLATE
REX2BF3
LABEL
REX2AVP
SCREW
REX0K45
LABEL
REX2ARH
BOLT
REX0JZM
CRANK ARM CAP
REX01A8
RIGHT COVER
REX2A2E
CRANK COVER
REX20F9
SCREW
REX228A
RIGHT CRANK ARM
REX01AA
RIGHT PEDAL
REX2BF6

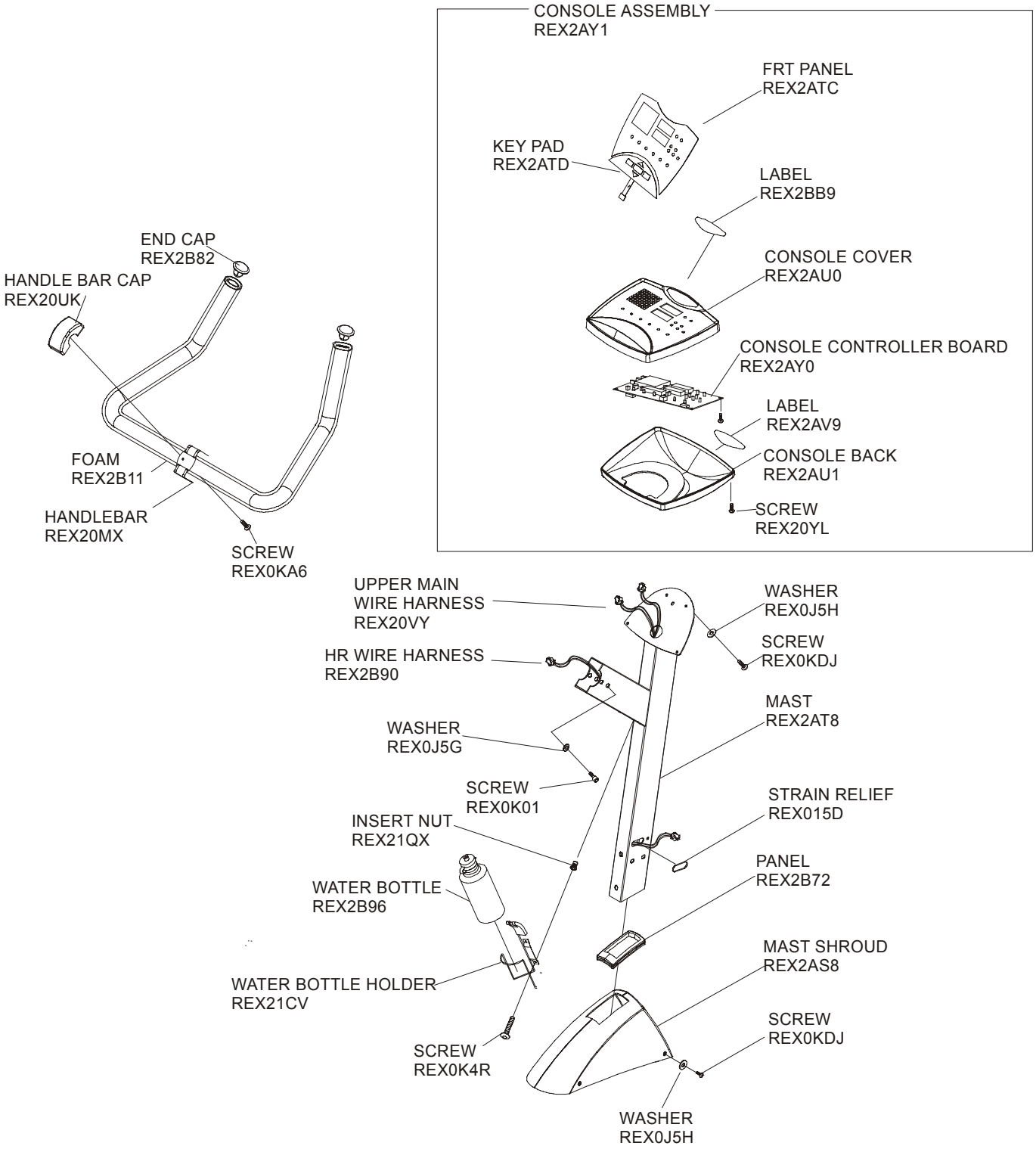
CONSOLE ASSEMBLY
REX2AY1
FRT PANEL
REX2ATC
KEY PAD
REX2ATD
LABEL
REX2BB9
CONSOLE COVER
REX2AU0
CONSOLE CONTROLLER BOARD
REX2AY0
LABEL
REX2AV9
CONSOLE BACK
REX2AU1
SCREW
REX20YL
END CAP
REX2B82
HANDLE BAR CAP
REX20UK
FOAM
REX2B11
HANDLEBAR
REX20MX
SCREW
REX0KA6
UPPER MAIN
WIRE HARNESS
REX20VY
WASHER
REX0J5H
SCREW
REX0KDJ
HR WIRE HARNESS
REX2B90
MAST
REX2AT8
WASHER
REX0J5G
SCREW
REX0K01
STRAIN RELIEF
REX015D
INSERT NUT
REX21QX
PANEL
REX2B72
WATER BOTTLE
REX2B96
MAST SHROUD
REX2AS8
WATER BOTTLE HOLDER
REX21CV
SCREW
REX0KDJ
SCREW
REX0K4R
WASHER
REX0J5H

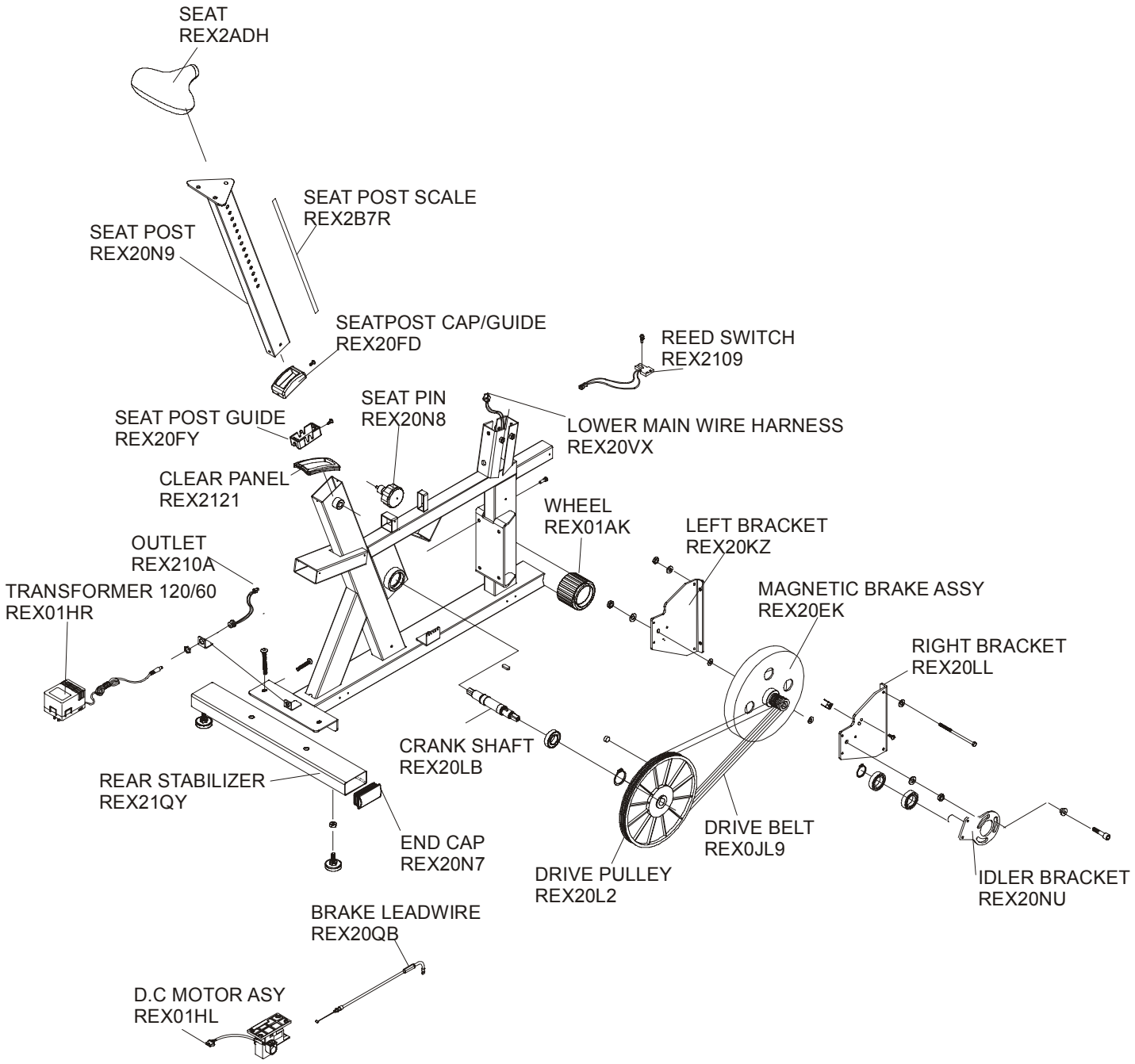
SEAT
REX2ADH
SEAT POST SCALE
REX2B7R
SEAT POST
REX20N9
SEATPOST CAP/GUIDE
REX20FD
REED SWITCH
REX2109
SEAT PIN
REX20N8
SEAT POST GUIDE
REX20FY
LOWER MAIN WIRE HARNESS
REX20VX
CLEAR PANEL
REX2121
WHEEL
REX01AK
LEFT BRACKET
REX20KZ
OUTLET
REX210A
TRANSFORMER 120/60
REX01HR
MAGNETIC BRAKE ASSY
REX20EK
RIGHT BRACKET
REX20LL
CRANK SHAFT
REX20LB
REAR STABILIZER
REX21QY
END CAP
REX20N7
DRIVE BELT
REX0JL9
DRIVE PULLEY
REX20L2
IDLER BRACKET
REX20NU
BRAKE LEADWIRE
REX20QB
D.C MOTOR ASY
REX01HL

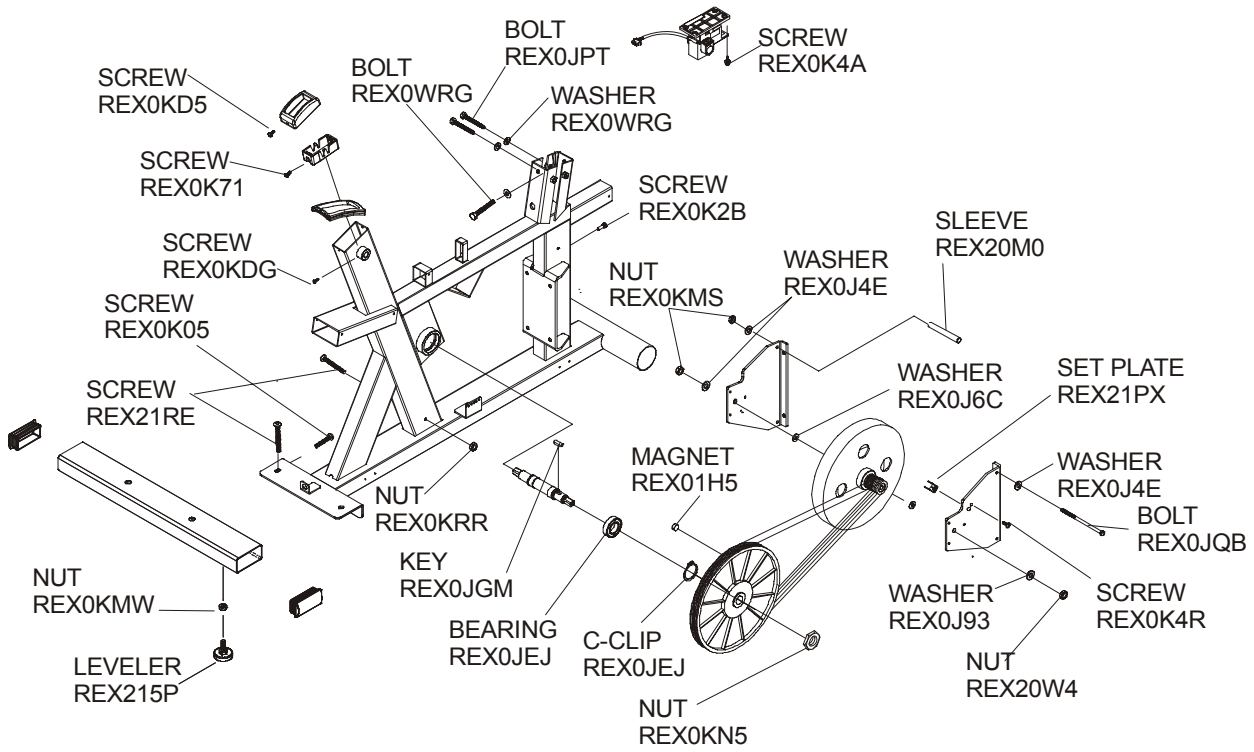
BOLT
REX0JPT
SCREW
REX0K4A
SCREW
REX0KD5
BOLT
REX0WRG
WASHER
REX0WRG
SCREW
REX0K71
SCREW
REX0K2B
SLEEVE
REX20M0
SCREW
REX0KDG
NUT
REX0KMS
WASHER
REX0J4E
SCREW
REX0K05
WASHER
REX0J6C
SET PLATE
REX21PX
SCREW
REX21RE
MAGNET
REX01H5
WASHER
REX0J4E
NUT
REX0KRR
BOLT
REX0JQB
KEY
REX0JGM
NUT
REX0KMW
WASHER
REX0J93
SCREW
REX0K4R
BEARING
REX0JEJ
C-CLIP
REX0JEJ
NUT
REX20W4
LEVELER
REX215P
NUT
REX0KN5

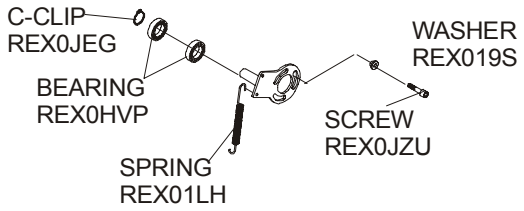
C-CLIP
REX0JEG
WASHER
REX019S
BEARING
REX0HVP
SCREW
REX0JZU
SPRING
REX01LH